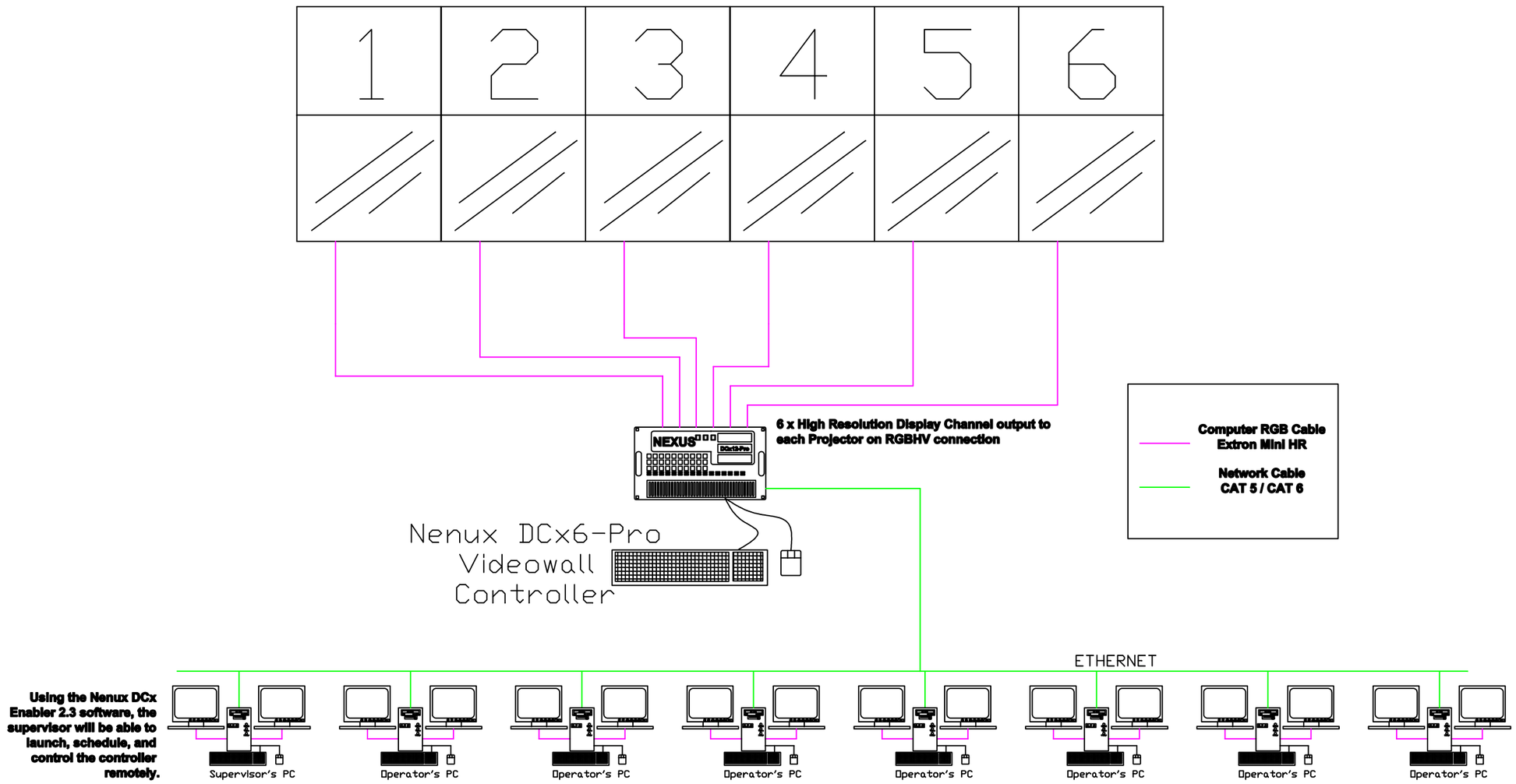1x6 Video Wall